High Performance Fixed Range

PT30 SERIES

- Gauge, compound, absolute and vacuum ranges from 2 psig to 15,000 psig
- Compact size
- Current and voltage outputs available
- 316 Stainless Steel wetted parts
- cULus Listed and RoHS compliant
- Built to CE standards to suppress RFI, EMI and ESD
- Optional front flush process connections available

APPLICATIONS

- Hydraulics & pneumatics
- Automotive
- Pumps & compressors
- Refrigeration controls
- Mobile equipment
- General industrial

Optional front flush process connections available

SPECIFICATIONS

Output signals	4 mA to 20 mA, 2-wire; 0 Vdc to 5 Vdc, 3-wire; 1 Vdc to 5 Vdc, 3-wire; 0 Vdc to 10 Vdc, 3-wire; 0.5 to 4.5 Vdc, 3-wire; 0.5 to 4.5 Vdc ratiometric, 3-wire	
Pressure ranges	Gauge, compound, absolute and vacuum ranges from 2 psi to 15,000 psi	
Accuracy*	±0.25% of span, non-linearity best fit straight line per IEC 61298-2 at reference conditions	
Response time	< 1 ms	
Service life	> 10 million load cycles	
Temperature ranges*	Compensated : Media: Media with 3 Fin: Ambient: Storage:	-4 °F to 185 °F (-20 °C to 85 °C) -22 °F to 221 °F (-30 °C to 105 °C) -22 °F to 302 °F (-30 °C to 150 °C) -4 °F to 185°F (-20 °C to 85 °C) -40 °F to 257 °F (-40 °C to 125 °C)
Power requirement*	10 Vdc to 35 Vdc: 8 Vdc to 35 Vdc: 12 Vdc to 35 Vdc: 4.5 Vdc to 5.5 Vdc:	4 mA to 20 mA, 2-wire 0 Vdc to 5 Vdc, 3-wire 1 Vdc to 5 Vdc, 3-wire 0.5 to 4.5 Vdc non-ratiometric, 3-wire 0 Vdc to 10 Vdc, 3-wire 0.5 to 4.5 Vdc ratiometric, 3-wire
Proof pressure	< 7,500 psi: 7,500 – 10,000 psi: > 10,000 psi:	2 times full scale 1.5 times full scale 1.2 times full scale
Burst pressure	< 7,500 psi: 7,500 – 10,000 psi: > 10,000 psi:	3 times full scale 2 times full scale 1.5 times full scale
Measuring element	316 Stainless Steel	
Process connection	316 Stainless Steel	
Electrical connection	Stainless Steel and Glass Filled PA	
Housing material	304 Stainless Steel	
Environmental rating	IP65: DIN EN 175301-803 Form A, DIN EN 175301-803 Form C IP67: 4-pin Bayonet, 6-pin Bayonet, Packard, M12 x 1 (4-pin), Deutsch IP68: Integral cable (gauge reference devices < 400 psi are IP67)	
Electromagnetic rating	Immunity per IEC 61000-6-2 Radiation per IEC 61000-6-3	
Electrical protection	Reverse polarity and short circuit protection	
Shock	200 g's according to IEC 60068-2-27	
Vibration	20 g's according to IEC 60068-2-6	
Weight	Approximately 4.5oz.	
Range limitations	Ranges greater than 10,000 psi not UL Listed	

* See user manual for detailed specifications

WARNING: This product can expose you to chemicals including Lead and Nickel, which are known to the State of California to cause cancer and birth defects or other reproductive harm. For more information go to www.P65Warnings.ca.gov

NOSHOK,Inc. 1010 W. Bagley Road | Berea, OH 44017 | Ph 440.243.0888 | Fax 440.243.3472

ORDERING INFORMATION

SERIES	**PT30**							
PRESSURE RANGES	**15psiv**	-15 psig to 0 psig	**15psig**	0 psig to 15 psig	**1000psig**	0 psig to 1,000 psig	**15psia**	0 psia to 15 psia
	15psic	-15 psig to 15 psig	**30psig**	0 psig to 30 psig	**1500psig**	0 psig to 1,500 psig	**30psia**	0 psia to 30 psia
	30psic	-15 psig to 30 psig	**60psig**	0 psig to 60 psig	**2000psig**	0 psig to 2,000 psig	**60psia**	0 psia to 60 psia
	60psic	-15 psig to 60 psig	**100psig**	0 psig to 100 psig	**3000psig**	0 psig to 3,000 psig	**100psia**	0 psia to 100 psia
	100psic	-15 psig to 100 psig	**150psig**	0 psig to 150 psig	**4000psig**	0 psig to 4,000 psig	**150psia**	0 psia to 150 psia
	200psic	-15 psig to 200 psig	**200psig**	0 psig to 200 psig	**5000psig**	0 psig to 5,000 psig	**200psia**	0 psia to 200 psia
	300psic	-15 psig to 300 psig	**300psig**	0 psig to 300 psig	**6000psig**	0 psig to 6,000 psig	**300psia**	0 psia to 300 psia
	2psig	0 psig to 2 psig	**500psig**	0 psig to 500 psig	**7500psig**	0 psig to 7,500 psig		
	5psig	0 psig to 5 psig	**600psig**	0 psig to 600 psig	**10000psig**	0 psig to 10,000 psig		
	10psig	0 psig to 10 psig	**750psig**	0 psig to 750 psig	**15000psig**	0 psig to 15,000 psig		
	psiv = vacuum gauge pressure	psic = compound gauge pressure	psig = gauge pressure	psia = absolute pressure	Other ranges available upon request.			
ACCURACY	**1**	±0.25% (of span, non-linearity, BFSL per IEC 61298-2 at reference conditions)						
OUTPUT SIGNALS	**1**	4 mA to 20 mA, 2-wire	**3**	1 Vdc to 5 Vdc, 3-wire	**13**	0.5 Vdc to 4.5 Vdc, 3-wire (ratiometric)		
	2	0 Vdc to 5 Vdc, 3-wire	**5**	0 Vdc to 10 Vdc, 3-wire	**31**	0.5 Vdc to 4.5 Vdc, 3-wire (non-ratiometric)		
PROCESS CONNECTIONS	**1**	1/8″ NPT Male	**24**	7/16-20 Female Schrader*	**71**	G1/2 Male ISO 1179-2 Front Flush*		
	2	1/4″ NPT Male	**46**	G 1/4 A Male ISO 1179-2	**72**	9/16-18 Male SAE -6 (J1926-2)		
	8	1/2″ NPT Male	**50**	7/16-20 Male SAE -4 (J1926-2)	**82**	1/2" NPT Male Front Flush*		
ELECTRICAL CONNECTIONS	**2**	4-pin Bayonet	**17**	DIN EN 175301-803 Form C w/ 3 ft. cable	**46**	Deutsch Integral 3-Pin (DT04-3P)		
	3	6-pin Bayonet	**18**	DIN EN 175301-803 Form A w/ 3 ft. cable	**66**	Deutsch Integral 2-Pin (DT04-2P)		
	7	DIN EN 175301-803 Form C	**21**	Deutsch Integral 4-Pin (DT04-4P)	**70**	DIN EN 175301-803 Form C w/o mating connector		
	8	DIN EN 175301-803 Form A	**25**	M12 x 1 (4-pin)	**80**	DIN EN 175301-803 Form A w/o mating connector		
	14	DIN EN 175301-803 Form A w/ 1/2" NPT female conduit	**34**	Packard 3-Pin				
			36	3 ft. Integral cable				
OPTION	**ST8**	Threaded Orifice (0.8 mm)	**3F**	Integrated 3 Fin Cooling Element**				

Please consult your local NOSHOK Distributor or NOSHOK, Inc. for availability and delivery information.

* Limited to pressure ranges 1,500 psi and below
** -71 and -82 Front Flush Process connections only

EXAMPLE

PT30 – 500psig – 1 – 1 – 2 – 66

Series ..... PT30 Series
Pressure range ..... 0 psig to 500 psig
Accuracy ..... ±0.25% of span (BFSL)
Output signal ..... 4 mA to 20 mA, 2-wire
Process connection ..... 1/4" NPT Male
Electrical connection ..... Deutsch Integral 2-Pin (DT04-2P)

NOSHOK,Inc. 1010 W. Bagley Road | Berea, OH 44017 | Ph 440.243.0888 | Fax 440.243.3472

Dimensions

PT30-2 (4-Pin Bayonet)

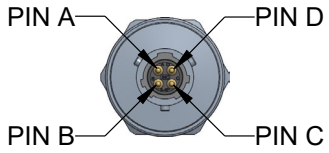

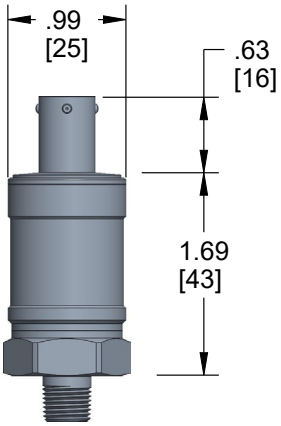

PT30-3 (6-Pin Bayonet)

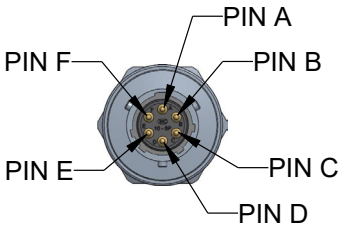

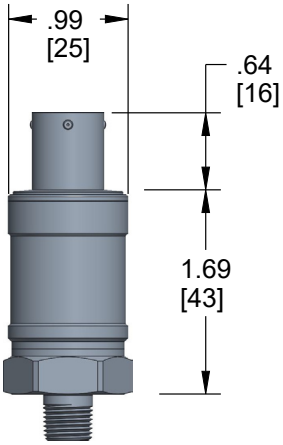

PT30 (DIN EN 175301-803 Form C)

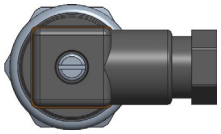

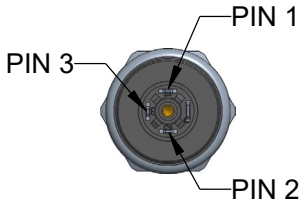

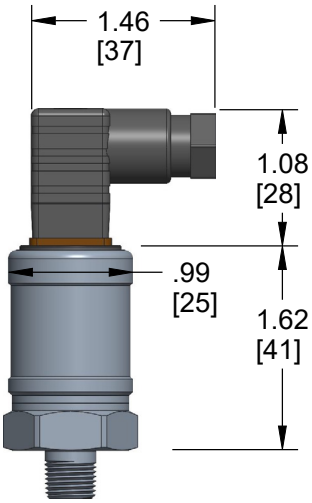

DIN Form C (PT30-7)

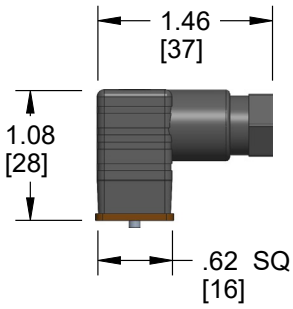

DIN Form C

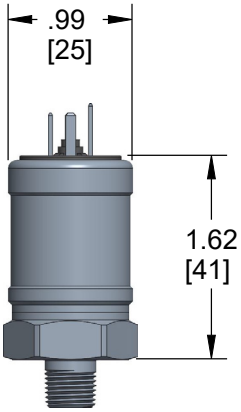

DIN Form C w/o mating connector (PT30-70)

NOSHOK,Inc. 1010 W. Bagley Road | Berea, OH 44017 | Ph 440.243.0888 | Fax 440.243.3472

PT30 (DIN EN 175301-803 Form A)

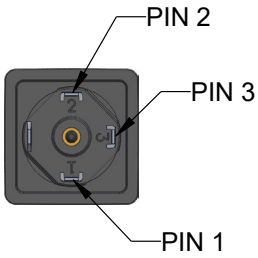

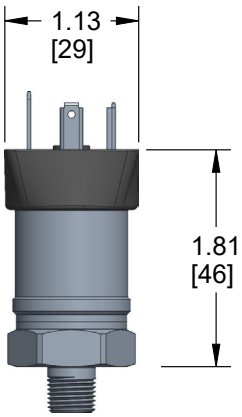

DIN Form A w/o mating connector (PT30-80)

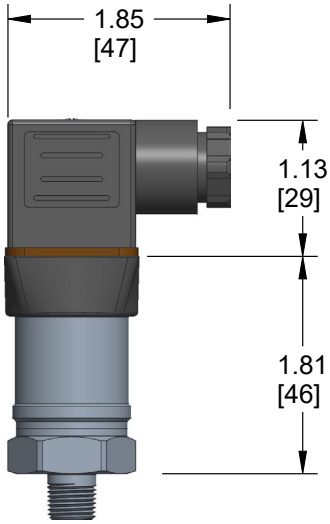

DIN Form A (PT30-8)

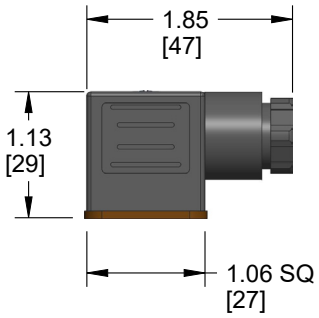

DIN Form A (PT30-8)

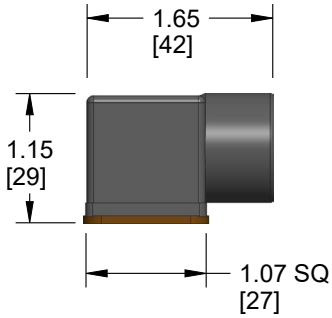

DIN FORM A w/ 1/2" NPT female conduit (PT30-14)

PT30-21 (Deutsch Integral 4-Pin DT04-4P)

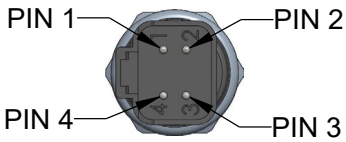

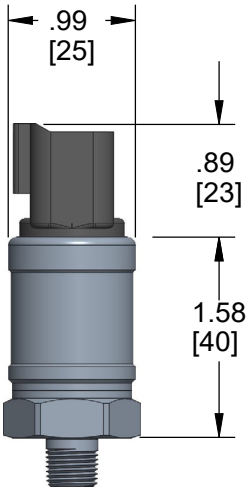

PT30-25 (M12 x 1 4-pin)

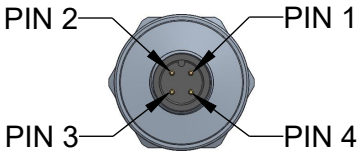

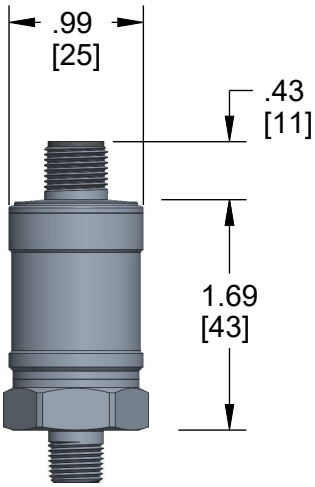

NOSHOK,Inc. 1010 W. Bagley Road | Berea, OH 44017 | Ph 440.243.0888 | Fax 440.243.3472

Dimensions

PT30-34 (Packard 3-Pin)

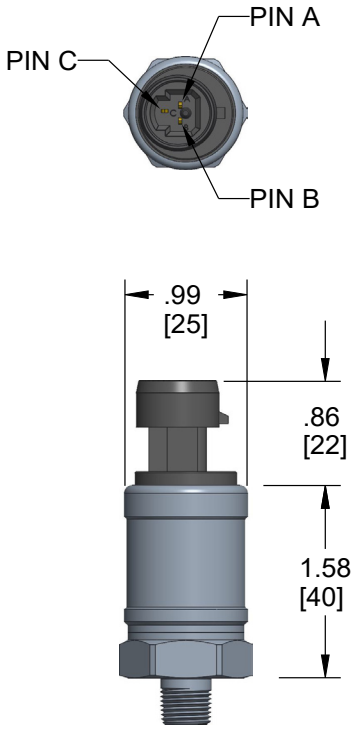

PT30-36 (3 ft. Integral Cable)

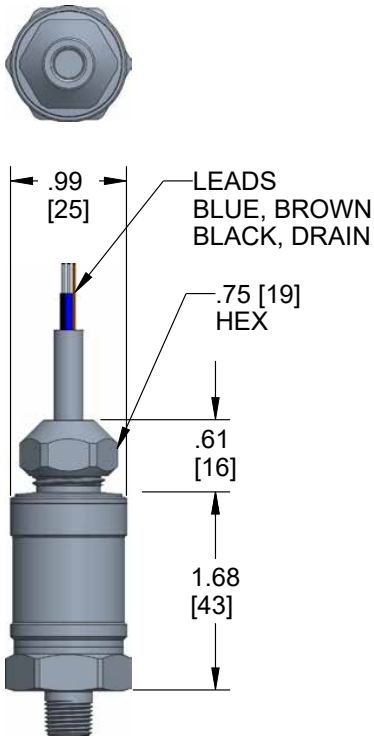

PT30-46 (Deutsch Integral 3-Pin DT04-3P)

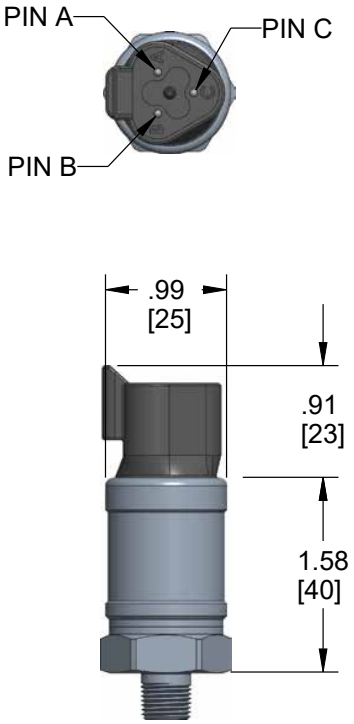

PT30-66 (Deutsch Integral 2-Pin DT04-2P)

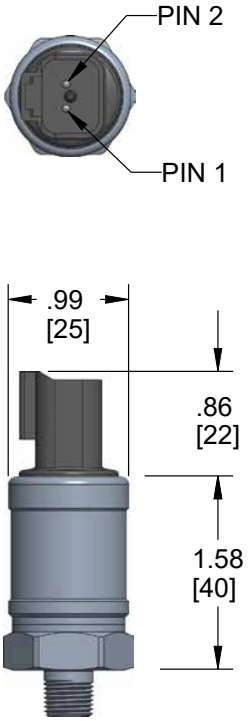

NOSHOK,Inc. 1010 W. Bagley Road | Berea, OH 44017 | Ph 440.243.0888 | Fax 440.243.3472

PT30 Process Connections

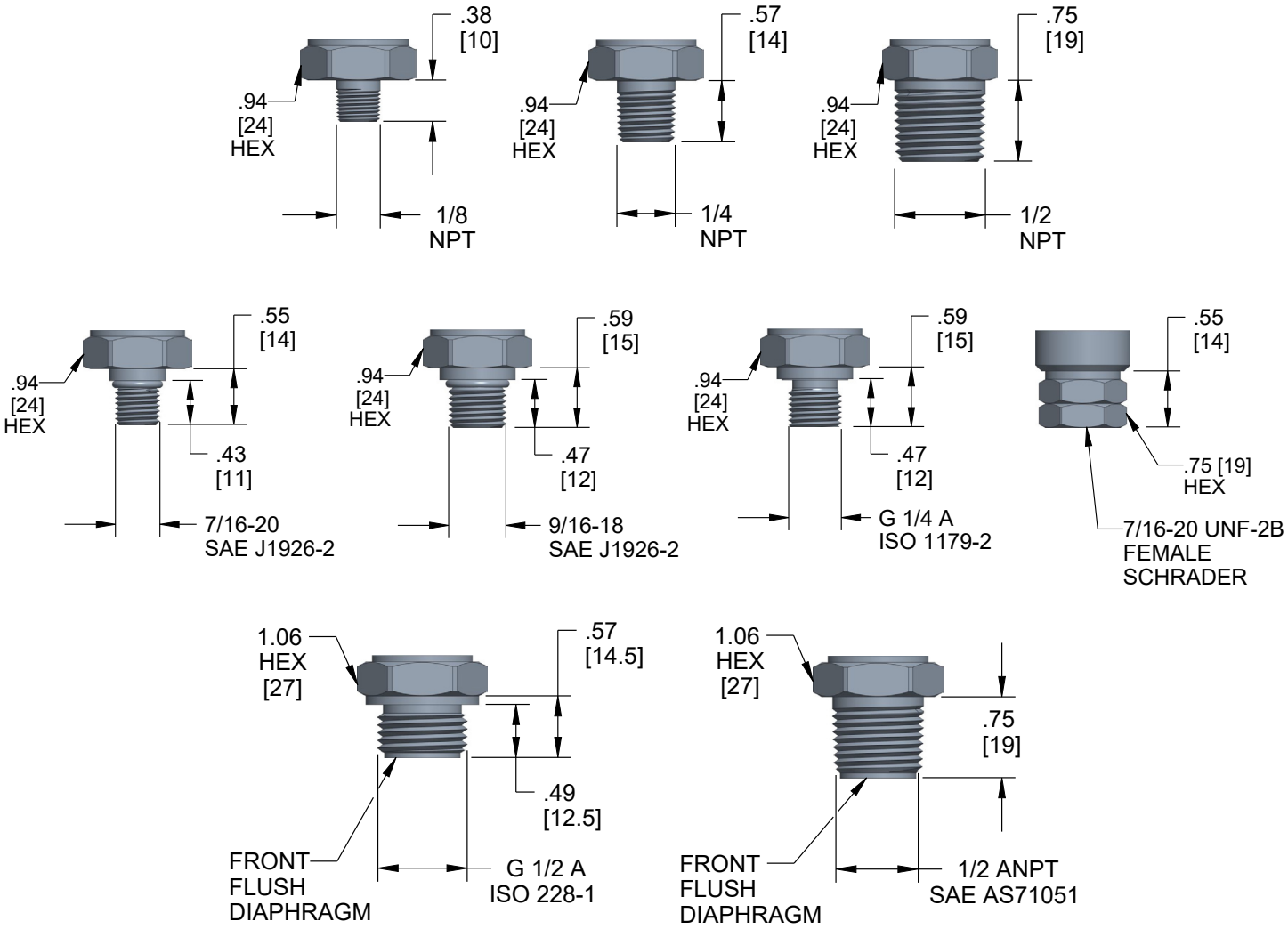

PT30 Integrated 3 Fin Cooling Element

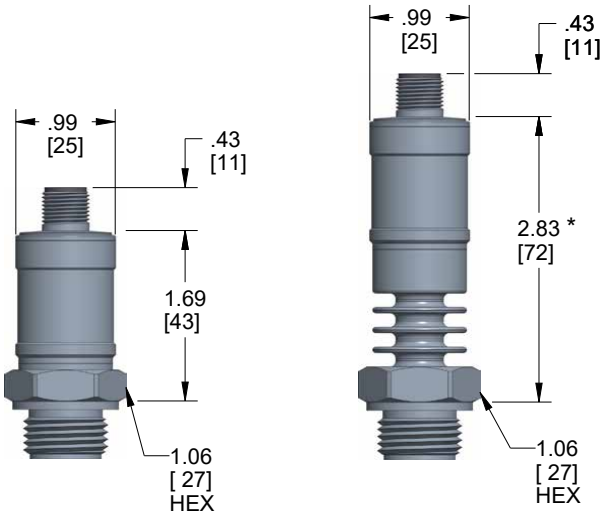

* Hex to electrical connection dimension increases by 1.14 [29] with cooling element option

Applies to all electrical connections. See M12 example

NOSHOK,Inc. 1010 W. Bagley Road | Berea, OH 44017 | Ph 440.243.0888 | Fax 440.243.3472